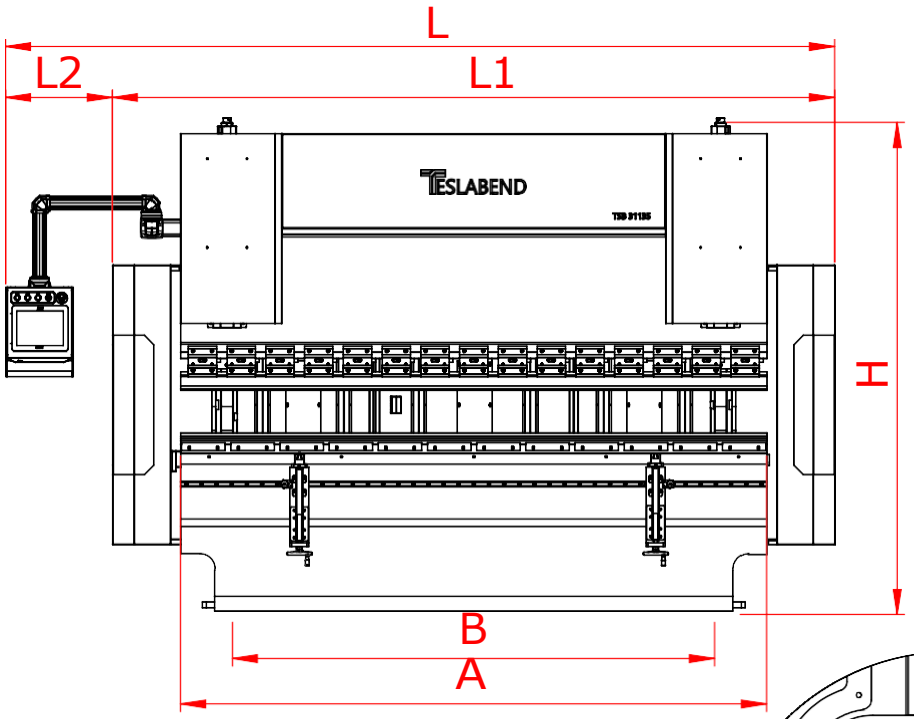

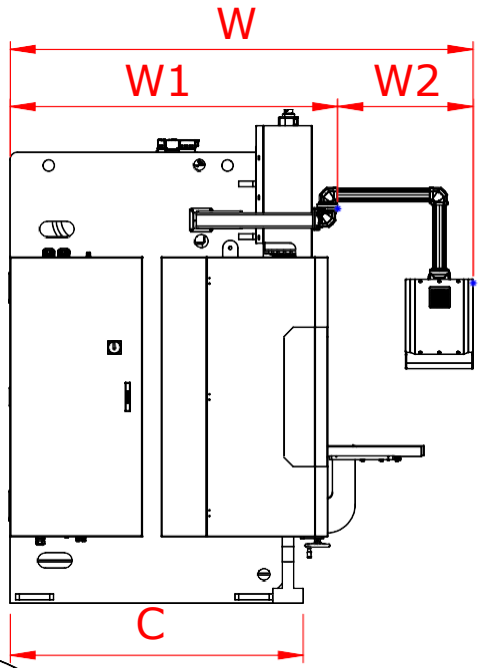

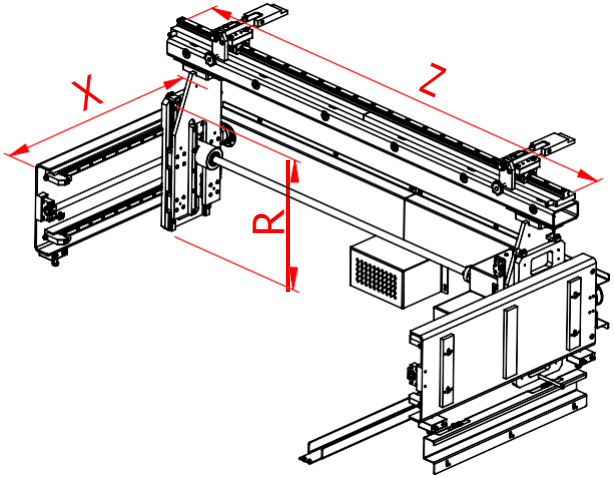

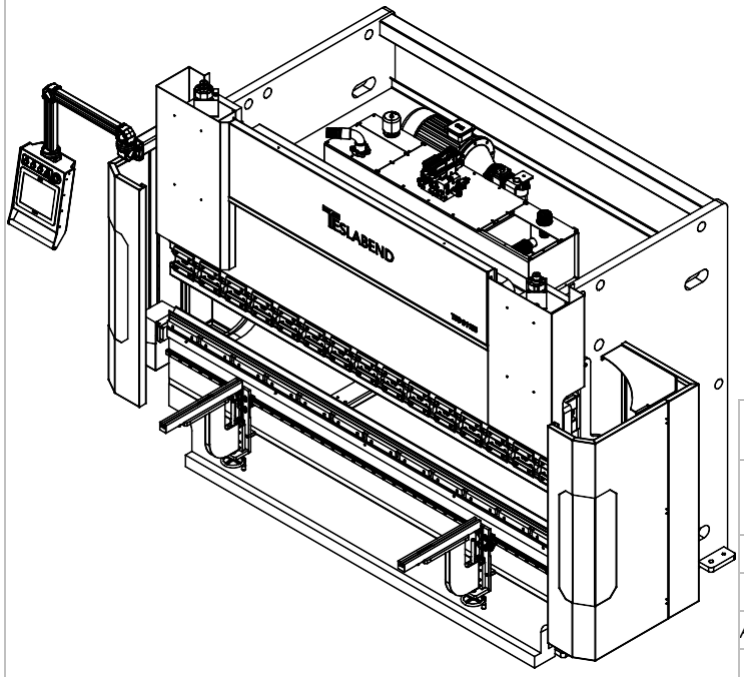

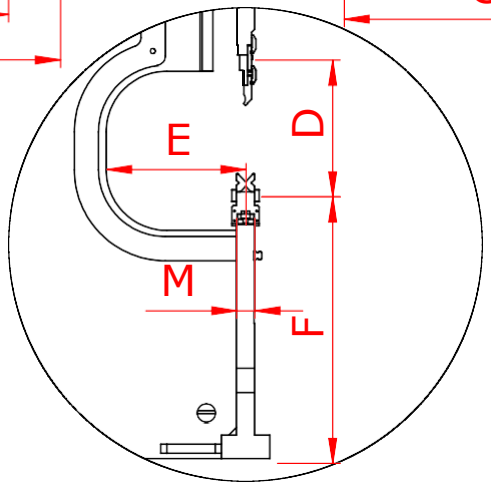

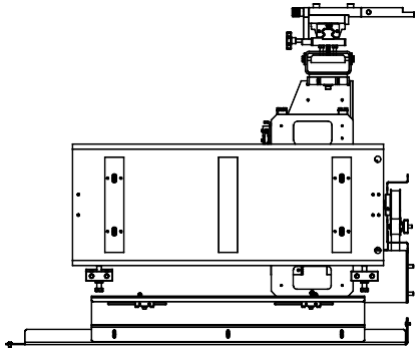

THE INFORMATION CONTAINED IN THIS DOCUMENT IS TESLAMAK MANUFACTURING PROPRIETARY INFORMATION AND MAY NOT BE REPRODUCED, USED OR DISCLOSED TO THIRD PARTIES FOR ANY PURPOSE WITHOUT THE WRITTEN CONSENT OF TESLAMAK MANUFACTURING.

Reproduction and sharing of technical drawings without permission is prohibited. Bevel sharp corners Measure on technical drawing do not buy.

The measurements specified are critical measurements. General Dimension Tolerance: ISO 2768-m and ISO 2768-K

TESLAMAK

	Date	Name	Sign	Material	Colour	Heat Treatment	Hardness	Sheet Size
Drawn By	9.10.2025	Recep GÜRBÜZ		Malzeme <belirli değil>				A4
Approved By	26.02.2026	Mehmet KURTULUŞ						
Scale					Weight(kg)	Drawing Number		Sheet
1:40	TSB-31135-R00-ECO				8150	TSB-31135-R00		1/2

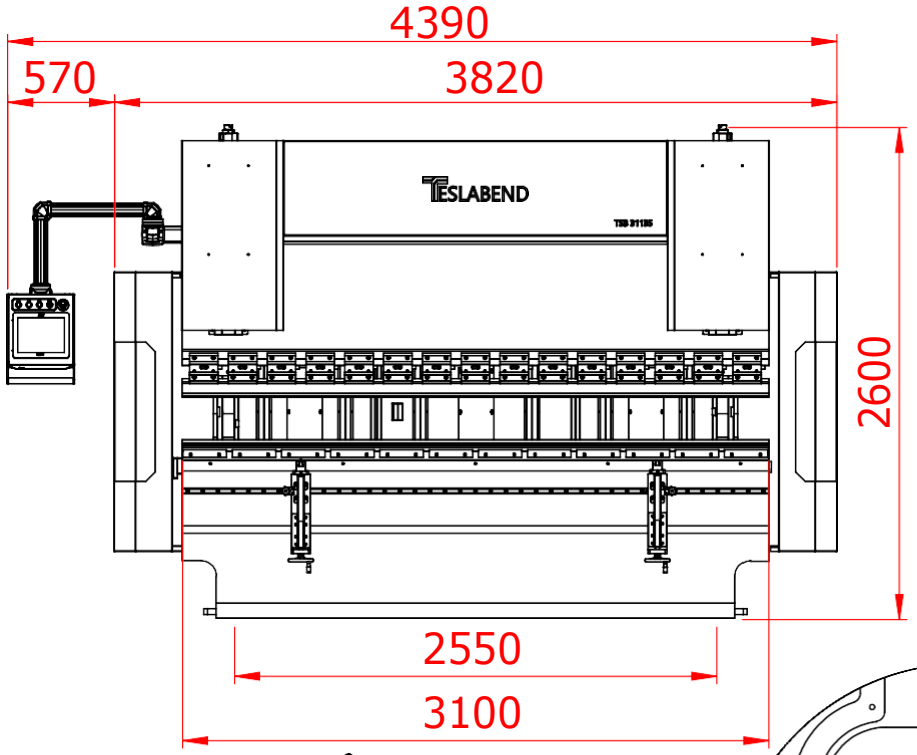

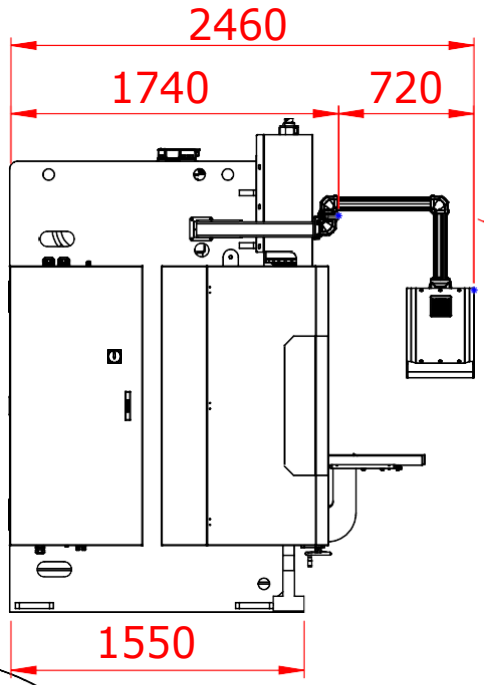

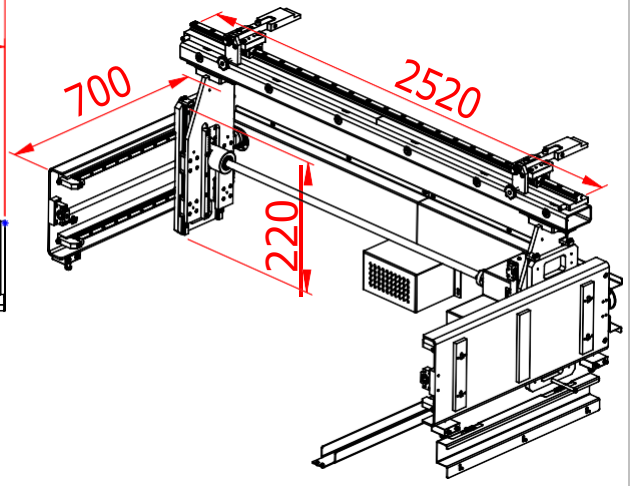

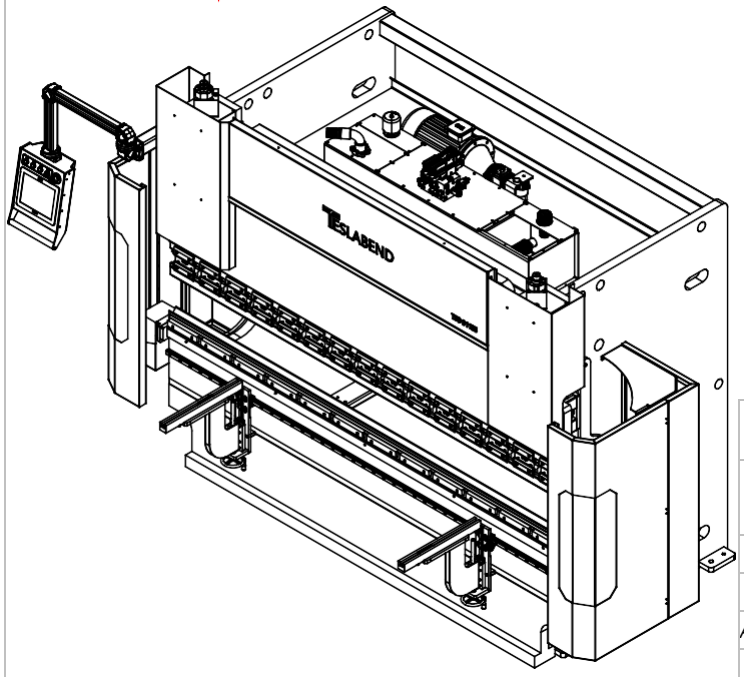

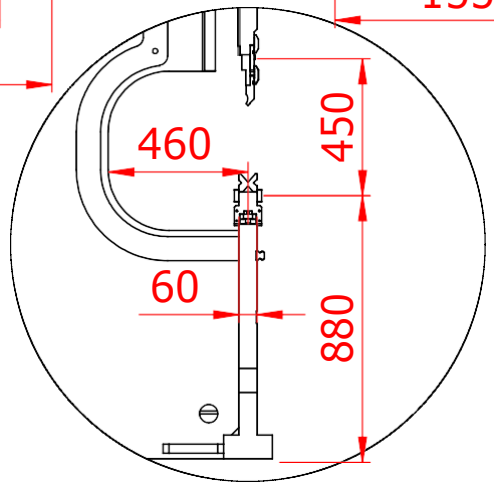

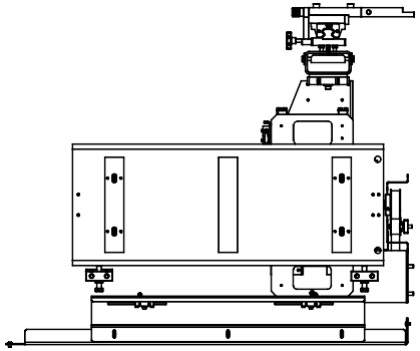

THE INFORMATION CONTAINED IN THIS DOCUMENT IS TESLAMAK MANUFACTURING PROPRIETARY INFORMATION AND MAY NOT BE REPRODUCED, USED OR DISCLOSED TO THIRD PARTIES FOR ANY PURPOSE WITHOUT THE WRITTEN CONSENT OF TESLAMAK MANUFACTURING.

Reproduction and sharing of technical drawings without permission is prohibited. Bevel sharp corners Measure on technical drawing do not buy.

The measurements specified are critical measurements. General Dimension Tolerance: ISO 2768-m and ISO 2768-K

TESLAMAK

	Date	Name	Sign	Material	Colour	Heat Treatment	Hardness	Sheet Size
Drawn By	9.10.2025	Recep GÜRBÜZ		Malzeme <belirli değil>				A4
Approved By	26.02.2026	Mehmet KURTULUŞ						
Scale	TSB-31135-R00-ECO				Weight(kg)	Drawing Number		Sheet
1:40					8150	TSB-31135-R00		2/2